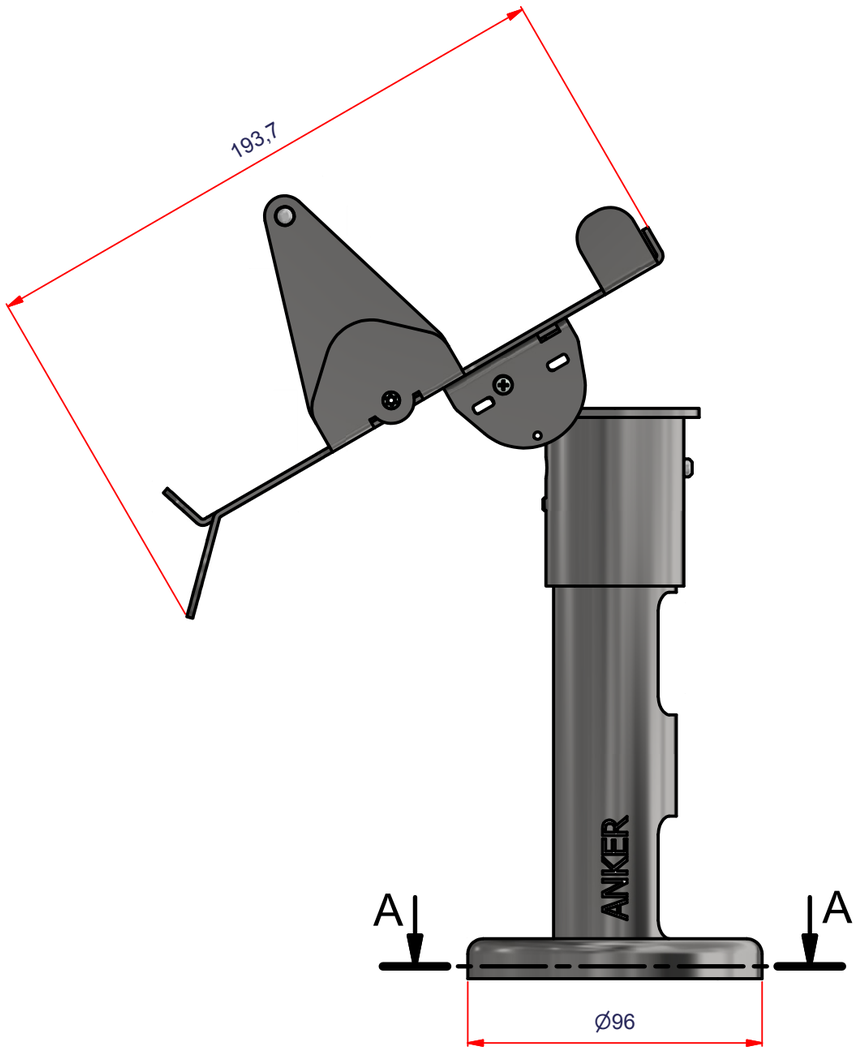

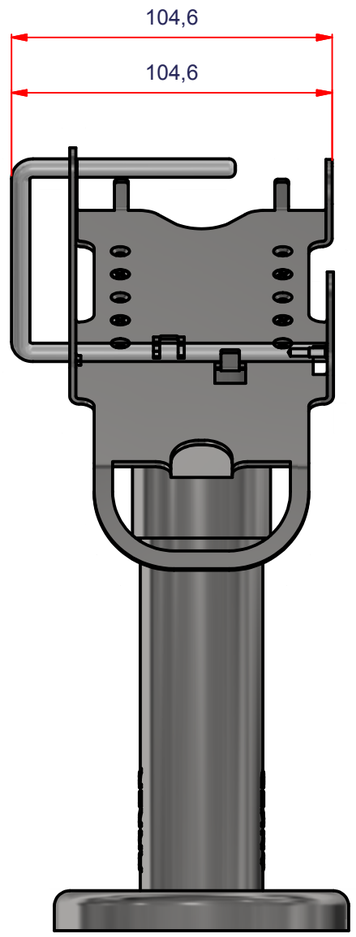

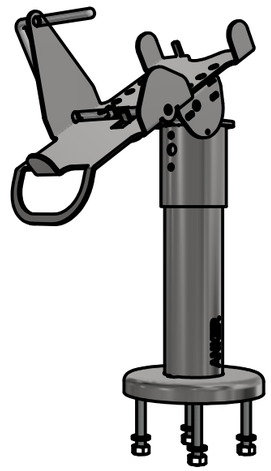

A-A (1 / 2)

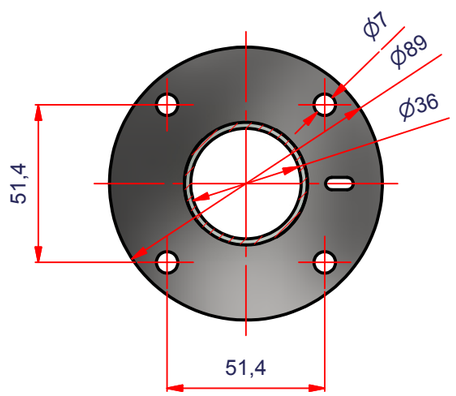

OBJ	QTY	partnumber	designation	remark
1	1	15160.172-0305	assy socket pipe 40, system 40/45, socket and application channel, hight 180	
1.1	4	15100.902-0000	M6x45 /8.8/DIN933/Zn	Beipack, part of delivery
1.2	4	15100.930-0000	Scheibe M6 DIN125 A/Zn	Beipack, part of delivery
1.3	4	15100.920-0000	Sechskantmutter M6	Beipack, part of delivery
2	1	15161.295-0000	kit bracket adapter Verifone VX520 fiscal (Poland)	

REV.	designation	date	approved
A	Erstausführung	07.12.2016	RBe

status	modification	date	name

	date	name
drawing	07.12.2016	RBe
approved		
norm		

Assy socket pipe 40 socket and application channel, hight 180, Verifone VX520 bracket solution

Anker

15100.482-0000

1

A3